REV	Description
2	

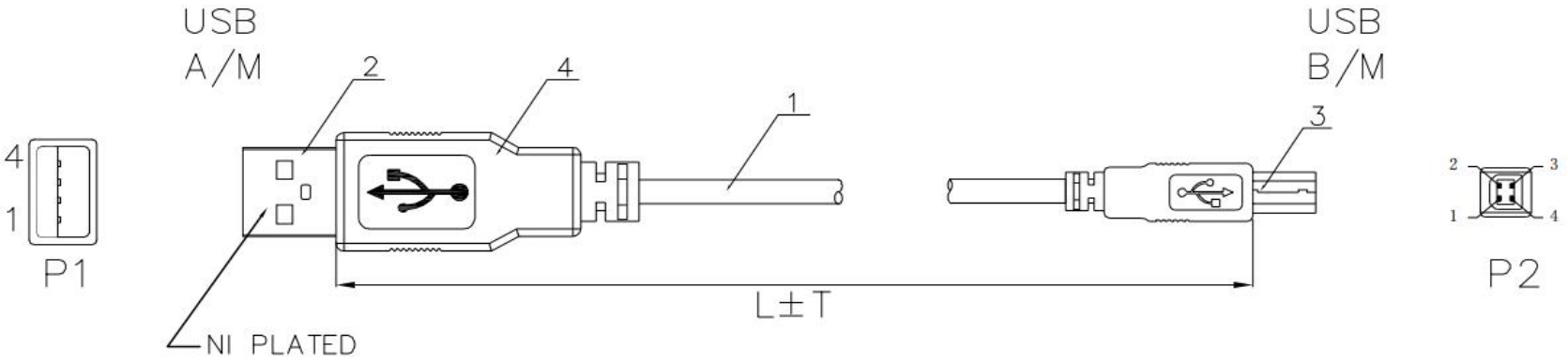

Item No.	Length
11.55.3101	L=0.8m±15mm
11.55.3102	L=1.8m±15mm
11.55.3103	L=3m±20mm
11.55.3105	L=4.5m±30mm

NOTE:

1 100% open short and miss wire test

2.Insulation resistance: DC300V/5s 10Mohm min

3.Dielectric strength: 150V AC/minute, 1mA

PINOUT

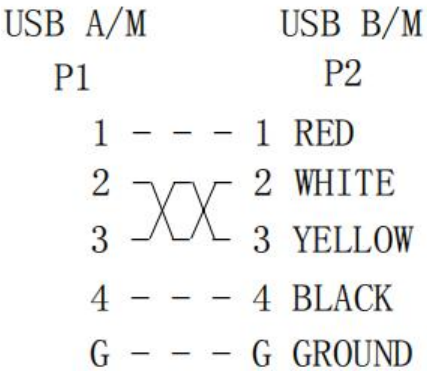

CABLE STRUCTURE

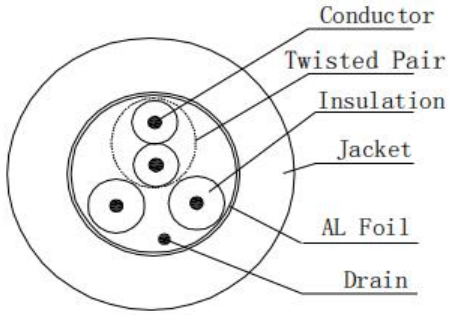

	COON-P2	USB B/M	3	NICKEL
	COON-P1	USB A/M	2	NICKEL
	MOLDING	PVC	2	beige
	CABLE	USB2.0 28AWG*2C CU+28AWG*1P CU+ALFoil+D OD4	1	beige
PART NO.	PART NAME	MATERIAL	QTY	REMARKS

PRODUCT		STANDARD USB2.0 Cable Type AM - BM, beige					
DRAW		CONSUMER					
CHECK		DATE		2025/12/18		REV.	A/1
APP		SHEET	1/1	UNIT	mm	SCALE	
SECOMP							