REV	Description
2	

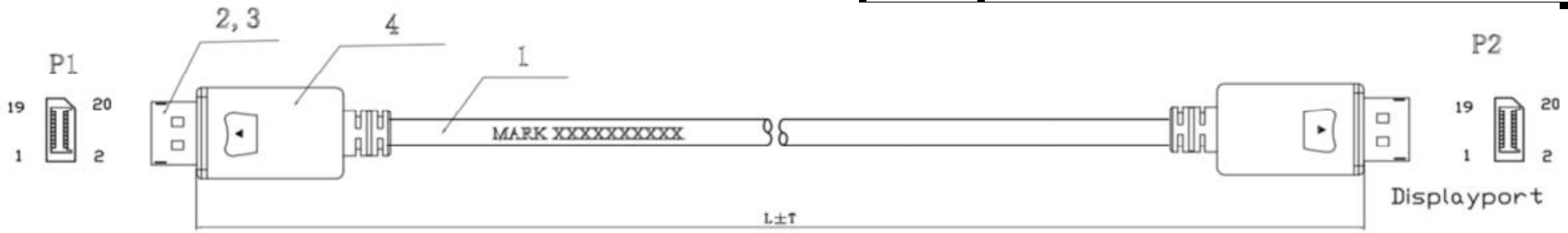

PIN OUT

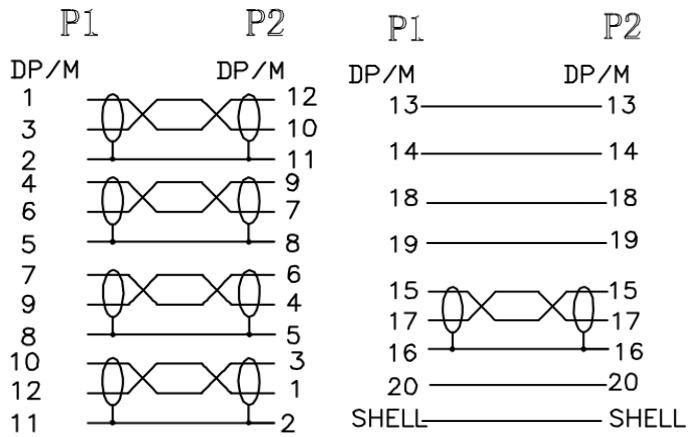

CABLE STRUCTURE

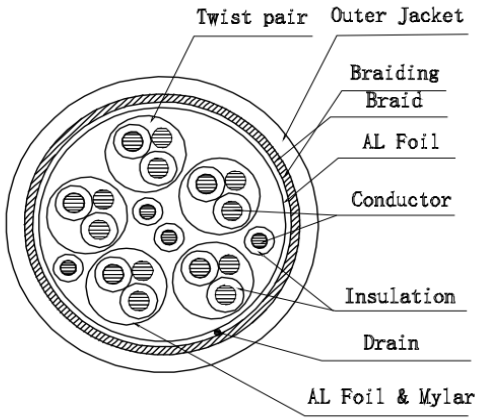

Item No.	Length
11.55.3691	L=2m±15mm
11.55.3692	L=3m±20mm
11.55.3693	L=5m±30mm

Note:

1. Resolution: 3840 X 2160@30hz

2. Insulation resistance: DC300V/5s 15Mohm min

3. Dielectric strength: 150V AC/minute, 1mA

4.Conductor resistance: 2.5ohm/max

5. 100% open short and miss wire test

	COON	DP 20PIN, male	3	GOLD
	MOLDING	DP 20PIN, male	2	GOLD
	CABLE	(0.25BC+FPE)*5P+(0.25BC+PE)*4C+MYLAY +0.25BC+AL+80/0.12AL MG+PVC OD:6.0mm	1	BLACK
PART NO.	PART NAME	MATERIAL	QTY	REMARKS

PRODUCT		STANDARD Cable DisplayPort, v1.1, 4K30Hz, M/M,black					
DRAW		CONSUMER					
CHECK		DATE		2025/12/18		REV.	A/1
APP		SHEET	1/1	UNIT	mm	SCALE	
SECOMP							