Datenblatt - Fiche technique - Data sheet

11.99.5784

VALUE DisplayPort Kabel DP - HDTV, ST/ST, 10,0 m

VALUE Câble DisplayPort DP - HDTV, M/M, 10,0 m

VALUE DisplayPort Cable, DP - HDTV, M/M, 10.0 m

FILE AMEND NOTE	DATE	REV.
ORIGINAL EDITION	DEC 06 2016	B/0

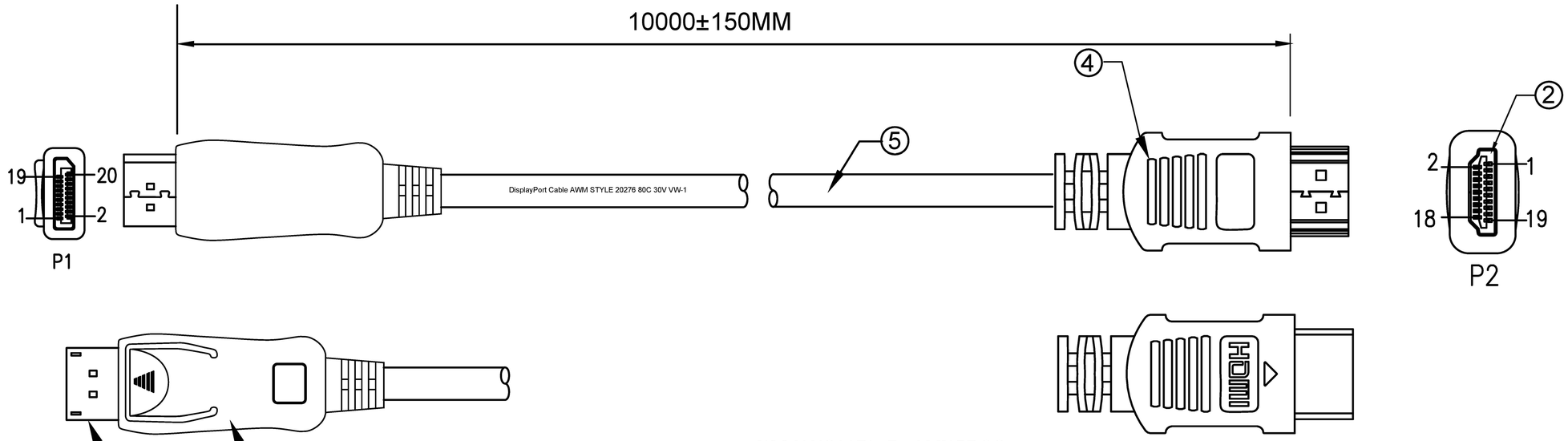

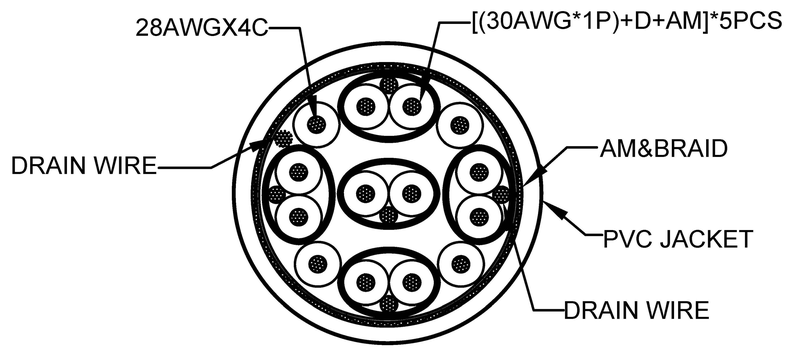

NOTE:

1.Electrical properties:

1.ALL COMPONENTS ARE RoHS COMPLIANT.
2.100% OPEN AND SHORT TEST.
3.CONDUCTOR RESISTANCE:3 OHMS
4.INSULATION RESISTANCE:10 MEGOHMS.
5.HI-POT:DC200V/0.01S
6.PC TEST 4K*2K 30Hz PASS 1080P PASS

2.REACH compliant

PIN ASSIGNMENT:

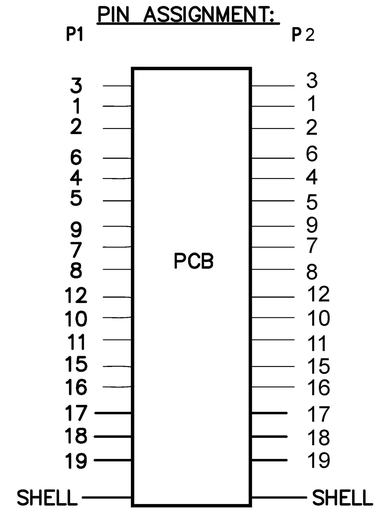

PACKING DRAW

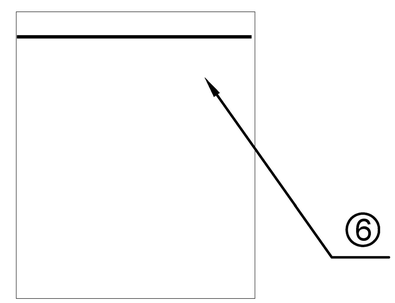

MATERIAL LIST

No.	PART NAME	DESCRIPTION	QTY
⑥	BAG	POLYBAG	
⑤	CABLE	(7/0.10BC*1P+7/0.10BC+ AM)* 5PCS+7/0.12BC*4C+AM+7/0.12BC+128/0.12 AL-MG+PVC, OD: 7.3±0.1mm, COLOR: BLACK	L
④	OUTER MOLD	BLACK PVC	1
③	OUTER MOLD	BLACK ABS	1
②	CONNECTOR	HDMI MALE, GOLD PLATED PIN, NICKEL PLATED SHELL	1
①	CONNECTOR	DisplayPort MALE , GOLD PLATED PIN, NICKEL PLATED SHELL	1

SECOMP

NAME	VALUE DP Cable, DP-HDTV, M/M, 10m, black			
CUSTOMER		MAPE	TOLERANCE X. ±1.00 X.X ±0.50	
MODEL No.	11.99.5784			
APPROVE BY	CHECK BY	DRAW BY	SCALE	MM
			PAGE	1/1